CULLUM MECHANICAL CONSTRUCTION, INC. #124

SHEETMETAL SHOP ORDER FORM

JOB NAME ______________________________ DATE __________

JOB # & C.C.: ______________________________ PRESSURE CLASS __________

REQUESTED DELIVERY DATE: ____________________ REQUESTED BY __________

CROSS

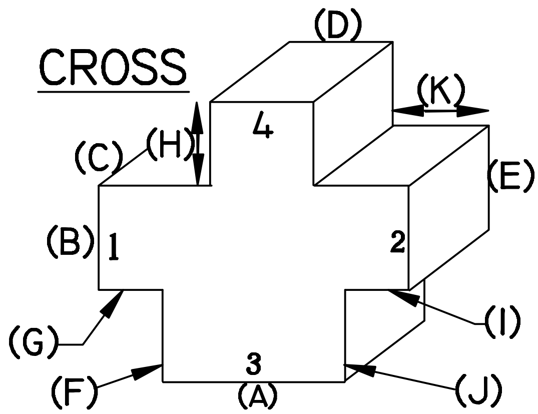

SPECIAL INSTRUCTIONS ______________________________

____

____

____

____

PC#	A	B	C	D	E	F	G	H	I	J	K	INS.	VANES	JT#1	JT#2	JT#3	JT#4	QTY